OPERATIONAL MANUAL

BMS BULUT MAKİNA®
SANAYİ VE TİCARET LTD. ŞTİ.

AIT-300 EN

PENDULUM IMPACT TESTING MACHINE

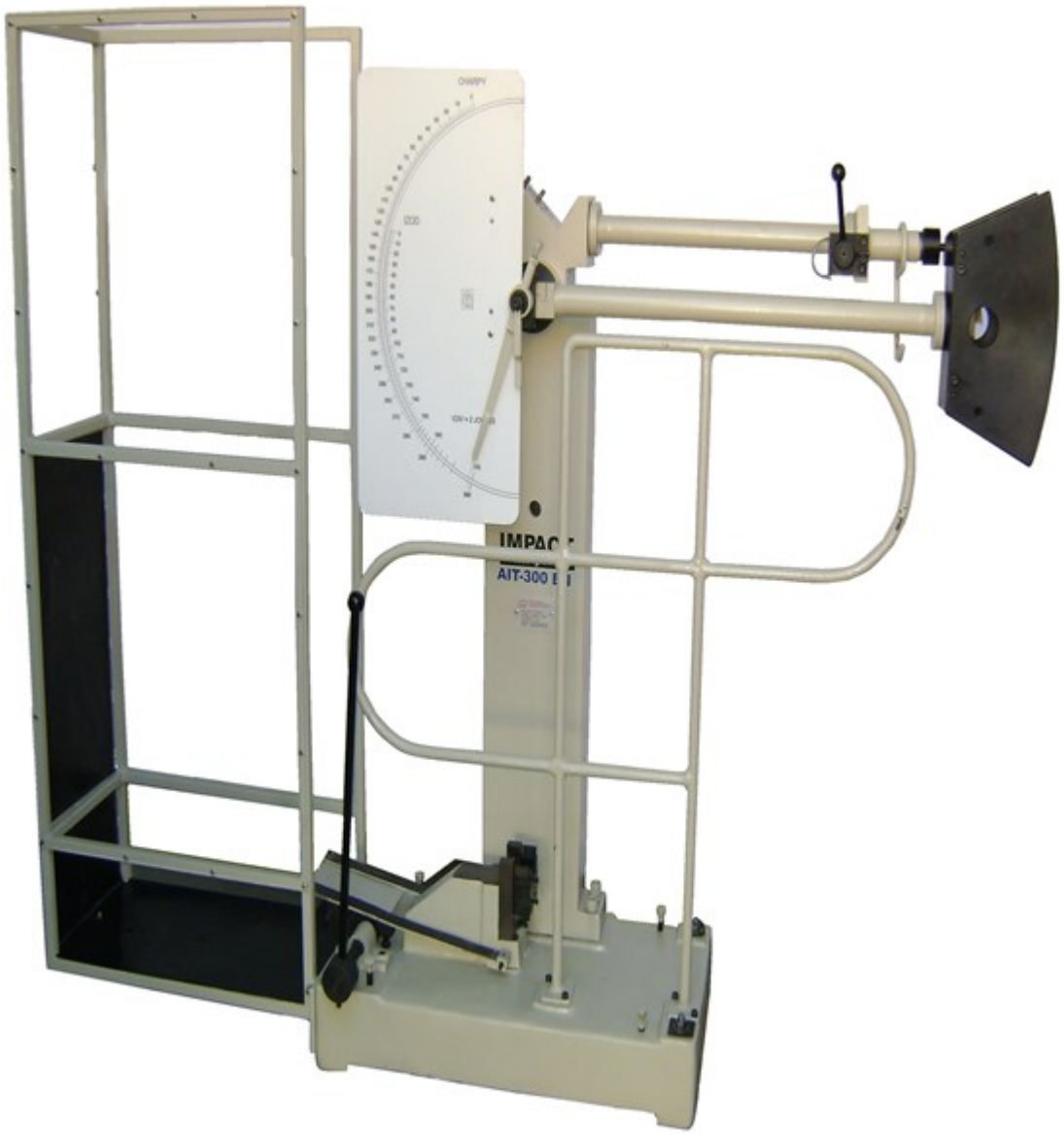

BMS Bulut Makina Sanayi ve Ticaret Ltd. Şti.
Kocaeli KOBİ Organize Sanayi Bölgesi
Köseler Mahallesi, 6.Cadde No: 20/2 Dilovası / KOCAELİ / TURKEY
Phone: +90 262 502 97 73-76 / +90 262 503 06 51
web site : www.bulutmak.com e-mail : bms@bulutmak.com

1. Machine Size and Weight

Overall dimensions of the machine	***140 X 50 X 190 cm***
Overall dimensions of the case	***155 X 82 X 155 cm***
Overall dimensions of the safe case	***60 X 33 X 142 cm***
Weight of the case	***650 kg***
Weight of the safe case	***18 kg***
Weight of the machine	***500 kg. (Approx.)***

2. Standard Accessories Storage in Wooden Case

The storage case contains the following standard accessories.
Striker for Charpy Test.
Striker for Izod Test.
Setting Gauge for Izod Specimen
Clamping piece for Striker.
Allen key 4 mm, 6 mm, 8 mm.
Spanner 10/11 mm
Charpy setting gauge

3. Technical Data (Charpy Test)

3.1. Pendulum

Maximum Impact Energy of Pendulum	***300 Joules***
Angle of drop of pendulum	***140 °***
Effective weight of pendulum	***20.59 kg / 21,02 kg***
Minimum value of scale graduation	***2 Joules***
Striking velocity of pendulum	***5.3465 m/sec***
Permissible total friction loss of corresponding indicated energy	***0.5% of potential energy***
Distance from axis of rotation of Pendulum to center of specimen	***815 mm***
Height of physical percussion center From the center of specimen	***± 8.15 mm***

3.2. Supports for Specimen

Distance between supports	***40 mm + 0.2 mm - 0.0***
Angle of test piece supports	***78° to 80°***
Angle of inclination of supports	***00***
Radius of supports	***1 mm to 1.5 mm***

3.3. Striking Edge for Charpy Test

Maximum width of striker	***18 mm***
Angle of striking edge	***30°***
Radius of curvature of striking edge	***2 mm to 2.5 mm***

1.4. Specimen for Charpy Test

Dimensions	***Length : 55 mm ± 0.6 mm***
	Width : 10 mm ± 0.11 mm
	Height : 10 mm ± 0.11 mm

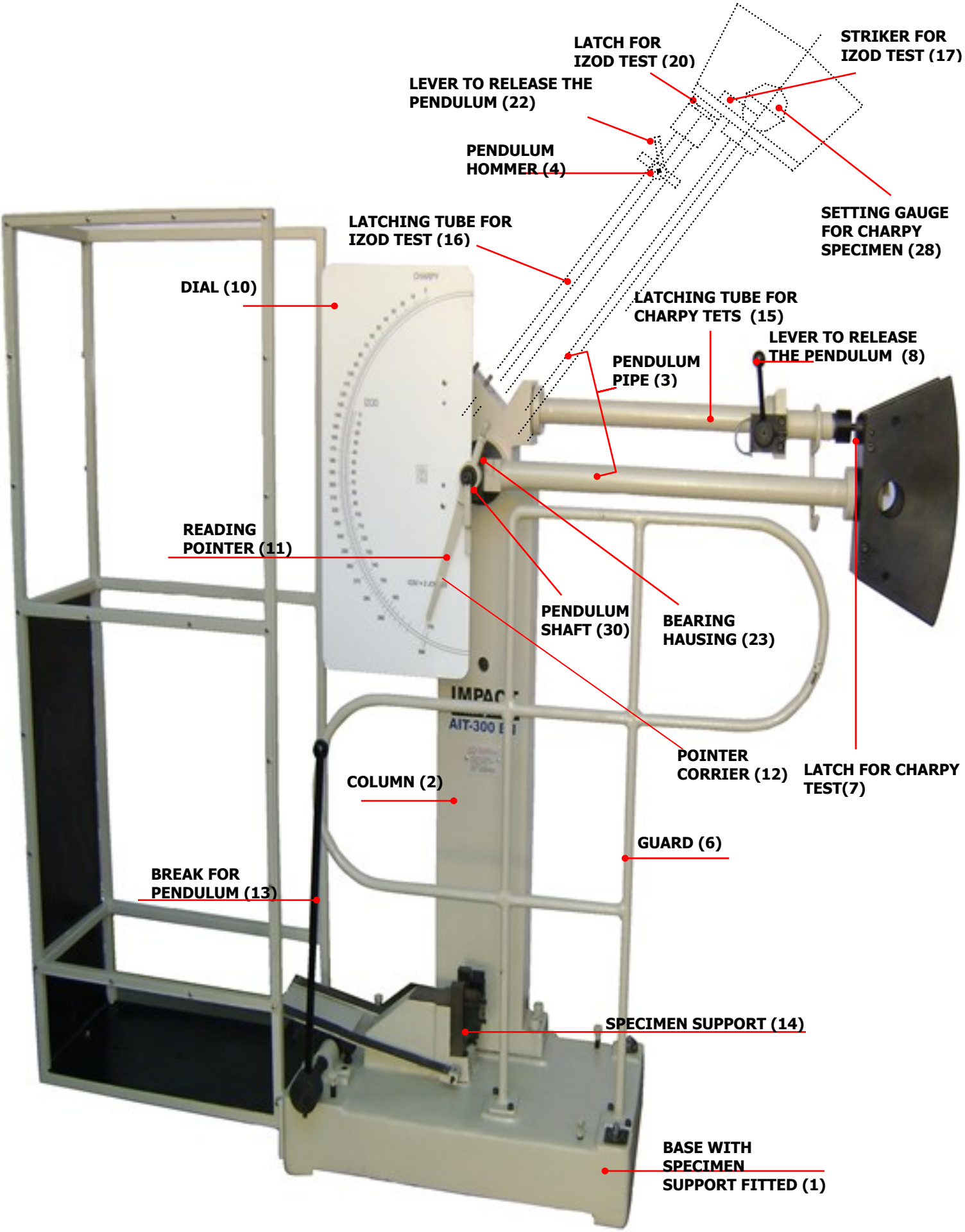
LATCH FOR
IZOD TEST (20)
STRIKER FOR
IZOD TEST (17)
LEVER TO RELEASE THE
PENDULUM (22)
PENDULUM
HOMMER (4)
SETTING GAUGE
FOR CHARPY
SPECIMEN (28)
LATCHING TUBE FOR
IZOD TEST (16)
DIAL (10)
LATCHING TUBE FOR
CHARPY TETS (15)
LEVER TO RELEASE
THE PENDULUM (8)
PENDULUM
PIPE (3)
READING
POINTER (11)
PENDULUM
SHAFT (30)
BEARING
HAUSING (23)
POINTER
CORRIER (12)
LATCH FOR CHARPY
TEST(7)
COLUMN (2)
GUARD (6)
BREAK FOR
PENDULUM (13)
SPECIMEN SUPPORT (14)
BASE WITH
SPECIMEN
SUPPORT FITTED (1)

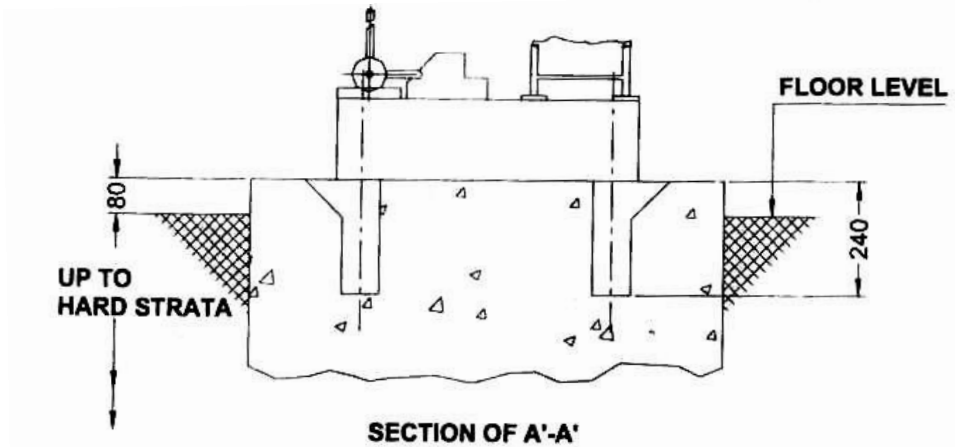

SECTION OF A'-A'

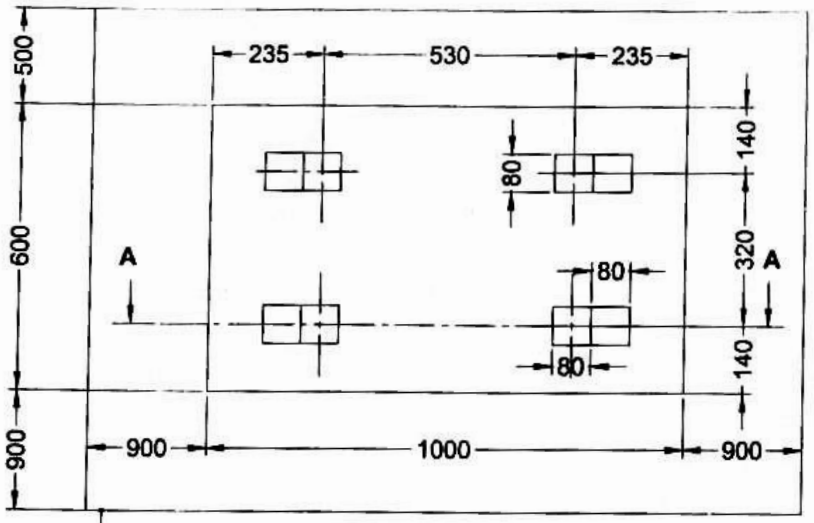

PLAN

THIS DARKED BORDER REPRESENTS SPACE NECESSARY FOR OPERATION & MAINTENANCE OF THE MACHINE.

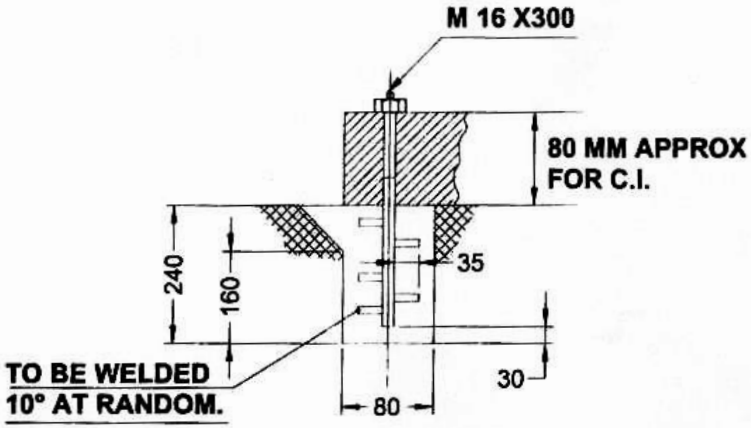

DETAILS OF FOUNDATION BOLT

FOUNDATION PLAN OF IMPACT TESTING M/C.

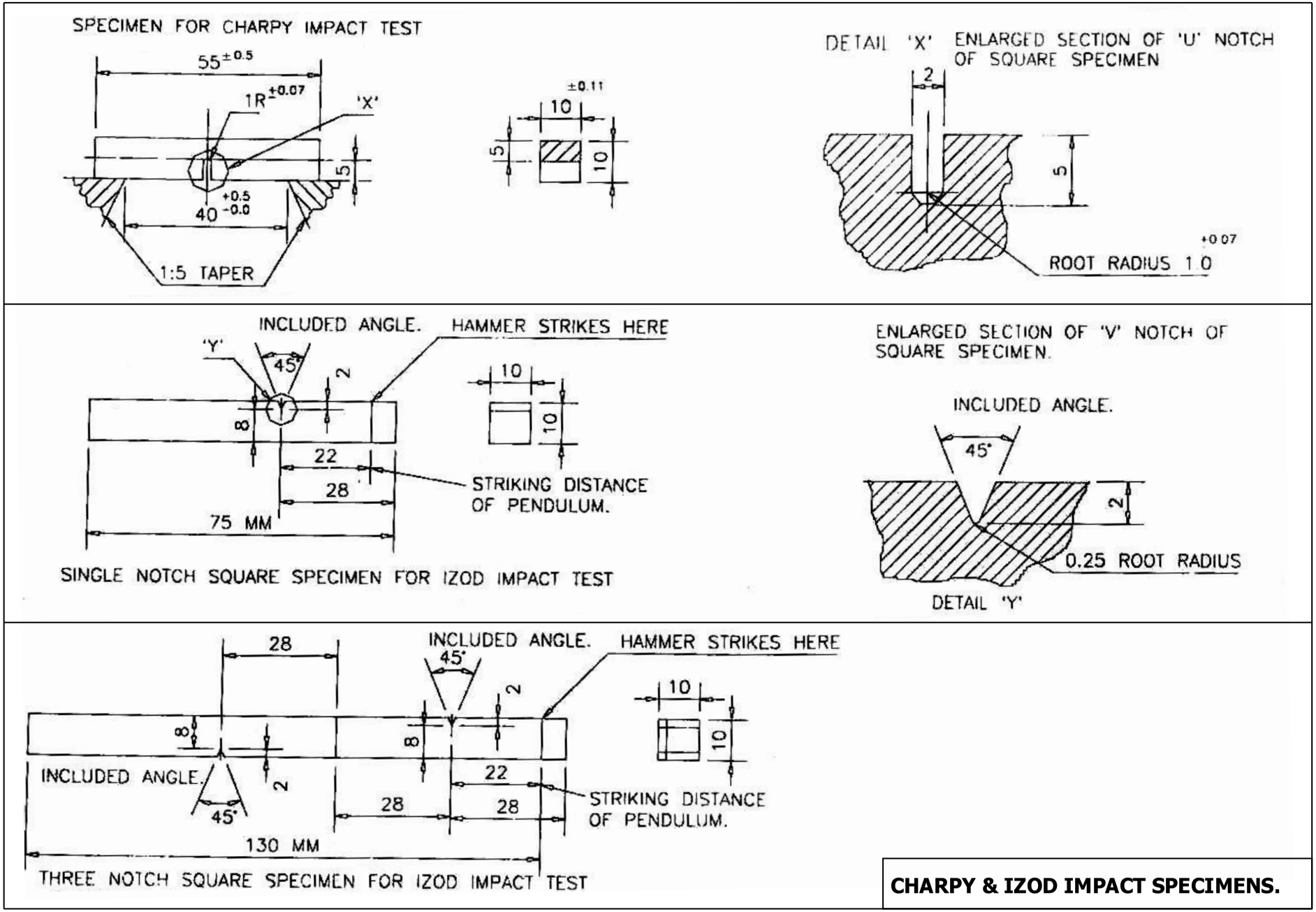

CHARPY & IZOD IMPACT SPECIMENS.

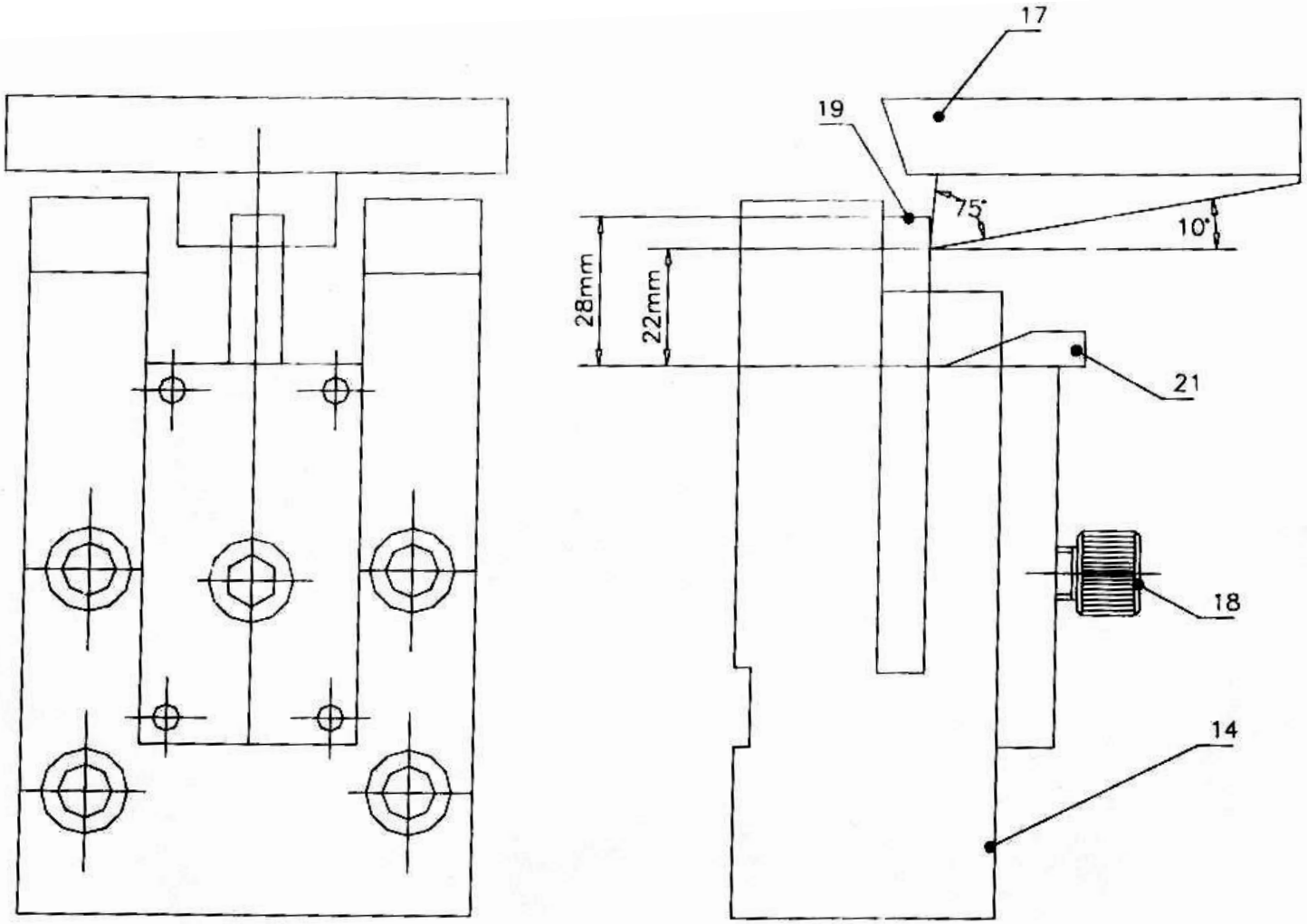

14. SUPPORT FOR IZOD TEST.
17. STRIKER FOR IZOD TEST.
18. CLAMPING SCREW FOR IZOD SPECIMEN.
19. SPECIMEN FOR IZOD TEST.
21. SETTING GAUGE FOR IZOD SPECIMEN.

IZOD TEST SUPPORT UNIT

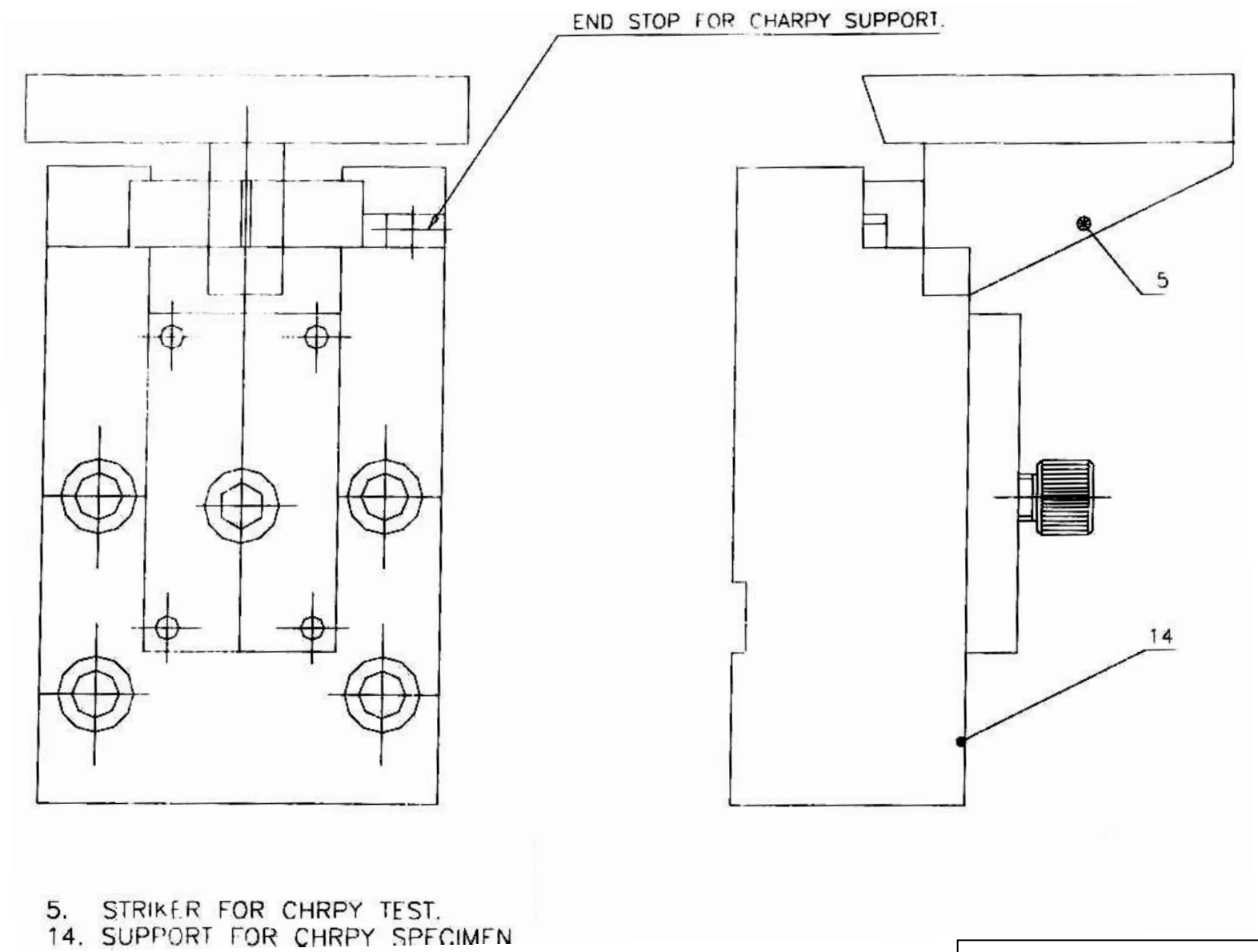

CHARPY TEST SUPPORT UNIT

3.Applicability

Pendulum Impact Testing Machine. AIT – 300 EN serves for conducting Impact Tests. On this machine, CHARPY and IZOD tests according to EN ISO 10045 – (1999) These tests enable the supervision of heat – treatment process and give the proof of susceptibility to brittle fracture. The proof of brittle fractures permits concluelone on cold brittleness, not brittleness, aging or other prejudices of material.

In Charpy tests, the specimen rests freely on two supports. The notch behind which the specimen breaks, subsides in the percussion plane of the striking edge. The notch impact strength is evaluated from the impact energy afforded on rupture of the sample divided by the original cross – section of the specimen at the notching point.

Moreover, with the same pendulum impact testing machine. Izod Tests and Impact Tension Tests may be carried out with the help of additional appliances which are supplied by the manufacturer as the standard accessories.

4. Installation and Getting Ready For Service

Open the wooden packing case and separate the machine. The greased parts are to be cleaned carefully by using Kerosene oil. Instruction Manual, Hammer, Latching Tube for Izod Test and Charpy test and the standard accessories in wooden case are separately enclosed in the same packing.

Please refer and build a machine foundation as per shown in the manual. Locate the machine on foundation in accordance with the foundation plan by receiving the rag screws through the 4 holes provided on the base.

Now attach the Izod clamping device (18) to the base (1) The Izod specimen is then clamped in it. The striker for Izod Test (17) is also built in with the hammer. Allow the pendulum hammer to hang free vertically. Now observe the striker through the holes on the plates of the hammer. If the nose of the striker is not just touching the front face of the specimen, with the help of leveling screws on the machine base, make the nose just to touch the specimen without any gap. For clear observation, use some source of light such as torch. If a very fine thin strip of light is visible through the gap between the nose and the specimen, then the machine is said to be installed perfectly in horizontal position. The rag screws are then tightened. After tightening the horizontal position of the machine is to be checked once again and if necessary, the machine is to be readjusted for its horizontal position in the same manner described above by means of leveling screws.

5. Preparation of Test Specimen

Impact test specimens for Charpy Test and Izod Tests must be prepared according to EN ISO 10045 the notch is produced either by milling or grinding. The notch shall be carefully prepared so that the no grooves appear at the base of the notch.

6. Important Hints for Protection of Machine

Extreme care must be taken to see that correct striker / striking fork and correct support / clamping are chosen for a particular test. For example: In order to carry out IZOD TEST-STRIKER (17) and clamping device (18) are only to be used.

After rebuilding, all screws are to be supervised for solid fit. Before proceeding to the actual test, it is to be confirmed that strikers and supports are correctly selected. If this is not ensured, a serious damage to the impact testing machine may result easily.

7. Hints for Protection of the Operator and To Avoid Accidents

The Pendulum Impact Testing Machine must be installed such that the swinging range of the pendulum does by no means project into spaces which are subject to traffic. Furthermore the working place is to be safeguarded against hitting by straying particles of the broken specimen.

Persons which are not involved in testing shall be permitted to stay too close to the machine. Every test is to be carried out with utmost care.

8. Attendance and Maintenance

The pendulum bearing assembly of the testing machine is sufficiently provided with lubricants by the manufacturer. Lubrication of the bearing by users is not allowed.
The bearing of the pendulum brake and the bearing of the release gear at the lever at the ratchet and at latches and are to be lubricated every six months with a few drops of machine oil.
The supports and the pendulum must always be kept clean and if necessary, must be cleaned daily. The polished parts of the testing machine must be wiped off with a soft oil rag once in a week.
The total friction loss for pendulum is kept below 0.5% of both the ranges. It may be required to test the value from time to time in order to ascertain proper working of the machine.

9. Description of Machine

The Pendulum Impact Testing Machine consists of the robust single piece frame, the pendulum the specimen support and the measuring equipment The base (1) of the machine is provided with 4 holes for the purpose of receiving 4 rag screw for fastening the machine at the proper place of installation. The rag screws are not included in the delivery of the machine. At the top of the frame the pendulum shaft is bedded in antifriction bearings of increased concentricity.
The pendulum is fastened to the pendulum shaft (30). The pendulum consists of the pendulum pipe (3) and pendulum hammer (4) of U – shaped design. Into this, the striker (5) is mounted for conducing Charpy impact bending test. The range, within which the pendulum is swinging, is partially protected by the guard (6). The pendulum holder is mounted in between column (2) and the guard (6) and at its upper end a latch (7) is
Provided which keeps the pendulum in elevated position. One lever (8) is provided for operating the latch (7).
Further, there is a dial (10) attached concentricity with the pendulum shaft. The scale is designed such that the impact energy absorbed in breaking the specimen can be read directly in Joules.

10. Procedure of Carrying Out Charpy Test

For conducting Charpy Test, Charpy striker (5) is to be firmly secured to the bottom of the hammer with the help of clamping piece.
The latching tube (15) is to be firmly secured to the bracket fitted at the top of column (2) with the help of socket head screws. (at 140 ° position)
Before proceeding to the actual test, the test for determining the frictional loss in the machine is to be conducted. Adjust reading pointer (11) with pointer carrier (12) to 300 J dial reading, when the pendulum is hanging free vertically. For this, use socket head screw of carrier (12). Now raise the hammer (4) by hands and latch in. Release the hammer by operating levers (8), the pointer (11) will then indicate the energy loss due to friction. *From this reading, confirm that the friction loss is not exceeding 0.5% of the initial potential energy.*

10.1. Now Raise the Hammer by Hands & Latch

Place specimen on the specimen support (14) with Charpy setting gauge. The specimen should be placed in such a way that the notch is averted to the direction of impact of the pendulum.
Press down lever (8) with left hand, after ascertaining that no person is within the range of swinging pendulum, so that pendulum is released and the specimen is smashed.
Wait until the pendulum is reversing its direction of motion and begins to swing slow. Thereafter by applying the pendulum brakes (13).
Read the position of the reading pointer (11) against scale on the dial (10) and note down.
Before proceeding to the next test, remove the broken specimen from the machine and bring reading pointer (11) on 300 J dial marking stated as above and then repeat the procedure.

11. Technical Data (Izod Test)

11.1. Pendulum

Maximum Impact Energy of pendulum	***168 Joules***
Angle of drop of pendulum	***90 °***
Effective weight of pendulum	***21 kg***
Minimum value of scale graduation	***2 Joules***
Striking velocity of pendulum	***3.99 m / sec.***
Permissible total friction loss	***0.50% of potential energy***
Distance from axis of rotation of pendulum to the center of strike on specimen.	***815 mm***
Height of physical percussion center from the striking point of the hammer.	***± 8.15 mm***
Distance between base of specimen notch (or top of grips) and the point of specimen hit by the hammer.	***22 mm ± 0.5 mm***

11.2. Striking Edge of the Pendulum

Angle of striking edge	***75 °***
Radius of curvature of striking edge	***0.5 mm to 1 mm***
Angle between the normal to the specimen and the underside face of the striker at striking point.	***100 ± 10***

12. Additional Description of the Machine

At the front part of the specimen support the clamping screw (18) is provided for tightening the specimen between the clamping plates. For setting the specimen in correct position, the setting gauge (21) is to be used. This will ensure that plane of symmetry of notch coincides with the top face of the clamping device and also the notch is at right angles to the plane of swing of pendulum.
A special striker for Izod Test (17) is fixed in hammer.
The latch tube (16) is to be attached to the bearing housings (23) of the machine by way of four screws, at 90 ° position.

13. Procedure of Carrying Out Izod Test

For conducting Izod Test, a proper striker (17) is to be secured firmly to the bottom of the hammer with the help of clamping piece.
The latching tube (16) for Izod Test is to be firmly secured to the bearing housings (23) at the side of the columns. The steel wire coming from the latch (16) is carried through the latching tube (16) and is fastened to the interior of release lever (22). The frictional loss of the machine can be determined in the same fashion as it was determined in case of Charpy Test except the angle of fall in this case being 90°.
Adjust reading pointer (11) along with pointer carrier (12) on 168 J reading on the dial (10) when the pendulum is hanging free vertically.
Now simply raise the pendulum by hands and latch in with latch (20).
The specimen (19) for Izod Test is firmly secured in the specimen support (14) with the help of clamping screw (18) and allen key supplied. Care is to be taken that the notch on the specimen should face the pendulum striker.
After ascertaining that there is no person in the range swinging pendulum will be free and the specimen will be smashed.
Carefully release the swinging pendulum by operating the pendulum brake (13).
Read off position of reading pointer (11) on dial (10) and note indicated value.
Remove the broken specimen by loosening the clamping screw (18) and thus the machine will be ready for carrying out next test.

14. Evaluation Test

The notch Impact strength 'I' is calculated according to the following relation.

I = K/A

Where

I – Impact strength (Joules/m2)

K – Impact Energy absorbed on repute in Joules.

A – Area of cross section of specimen below the notch before test in m2.

The notch Impact strength depends largely on the shape of the specimen and the notch. The values determined with other specimen, therefore may not be compared with each other.

15. Acceptance Report AIT-300 EN

15.1. Universal Impact Testing Machine

Pendulum Impact Tester for Conducting Charpy, Izod Tests

Object of Measurement	Measuring Means	Permissible Deviation	Remarks
Max. initial striking energy		± 1 % 0.5 %	OK
Kgm / 300 J. For Charpy Test & kgm / 150 J /168 J For Izod Test.		Initial energy	
Total frictional losses on full pendulum swing shall be negligible.		0.5% if Indicated Energy	OK
Vertical distance from axis of pendulum shaft to the center of specimen / to the point of specimen hit by the hammer 815 mm.	Measuring Device	± 0.20%	OK
Fall angle 141.80 for Charpy Test and shall be retained during release.	Clinometer		OK
Dimensional check of specimen supports for Charpy Impact Test.	Caliper Gauge/s		
Distance between supports 40 mm.	Vernier Caliper	+ 0.2 /- 0.0	OK
Radius of curvature of supports 1.25 mm.	Gauge	± 0.25 mm	OK
Coplanarity of Anvils & Support	Measuring device	± 0.10 mm	OK
Distance between Anvil & striking edge when Pendulum in vertical suspended position	Vernier Caliper	9.5 to 10.5	OK

Object of Measurement	Measuring Means	Permissible Deviation	Remarks
Dimensional check of striker for Charpy Impact Test	Gauge		
Radius of cuvature of nose of the striker 2.25 mm.	Radius Gauge	± 0.25 mm	OK
Max. width of striker 18 mm.	Micrometer		
Dimensional check of specimen gripping device for Izod Test.			
Vertical distance of striking nose from the top of grips 22 mm	Vernier Caliper	± 0.5 m	OK
Angle between top face of grips and face holding the specimen vertical 90 °	Gauge		OK
Dimensional check of striker for Izod Test.	Vernier Gauge		
Angle at tip of the nose of the striker 75 °	Bevel Protector	± 10	OK
Angle between normal to the specimen and the underside face of the hammer at striking point 100	Gauge	± 10	OK
Radius of curvature of the nose of the striker 0.75 mm	Radius Gauge	± 0.25 mm	OK
Lift angle of pendulum for Izod test 90 °	Gauge	Precision Angle level gauge	OK

16 .HOW TO SET TO POSITIONS OF CHARPY & IZOD SAMPLES

LOCATING APPARATUS FOR CHARPY SAMPLE

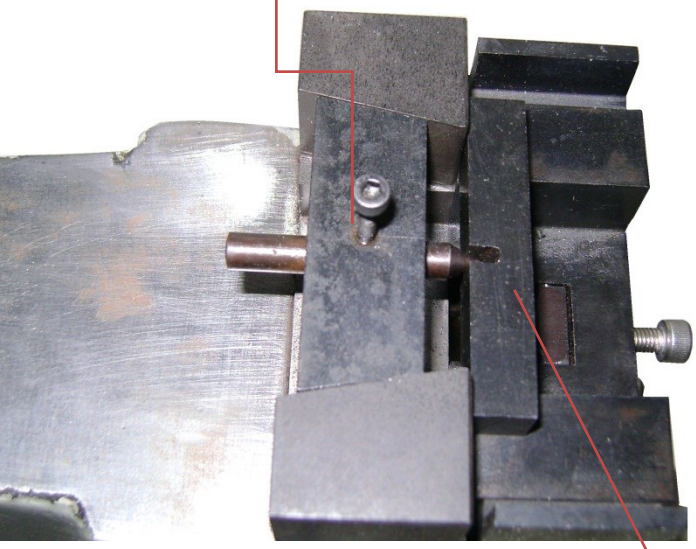

SAMPLE U

CHARPY SAMPLE WITH U NOCH

IZOD SAMPLE WITH V- NOCH

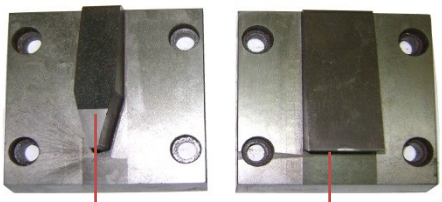

CHARPY IMPACT KNIFE

IZOD IMPACT KNIFE

LOCATING APPARATUS FOR IZOD SAMPLE

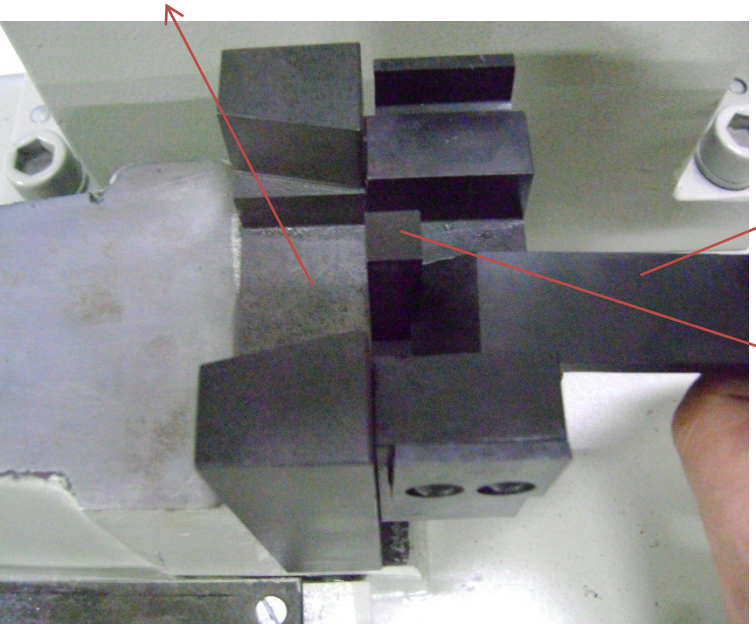

ADJUSTMENT APPARATUS FOR POSITIONING OF IZOD TEST

IZOD SAMPLE WITH V-NOCH